ULTIboard
PCB Design

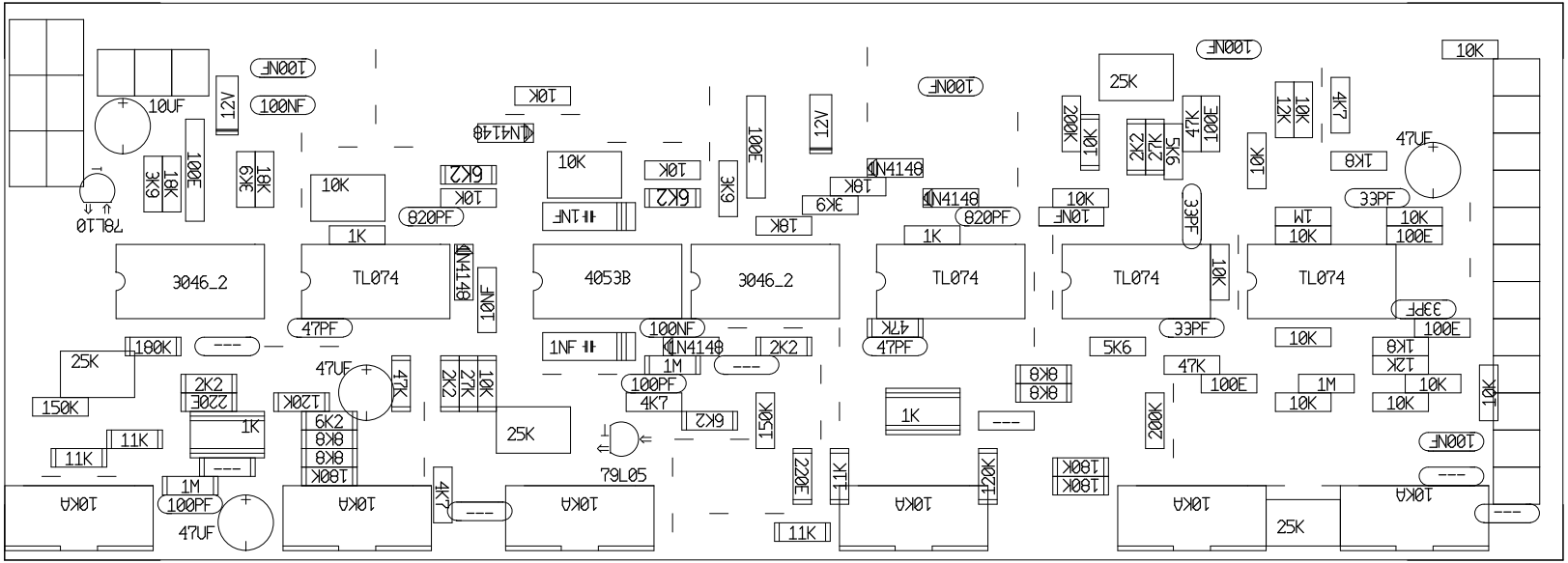


COL1VC02, Silkscreen (Jan. 22, 2020) (15:13) (BEVER-CII\09) SCALE: 100% ROTATED
Drill Ref Pnt: 0.000, 0.000 (inch)