CUSTOMER'S NAME

Bever

ALPHA REFERENCE NO
SP06120160

SPECIFICATION

PART NO.	ALPHA MODEL NAME
	RV16AEF-20B2-17K-B10K-1041A

MODEL NAME
MODEL NO.

APPROVAL

PREPARED BY	REVIEWED BY	APPROVED BY
吳 95.12.27 麗君	何 95.12.28 建志	楊 2006-12-28 孟鑫

ALPHA

台灣艾華電子工業股份有限公司

桃園市中正路1221～1223號9樓

TAIWAN ALPHA ELECTRONIC CO., LTD.

9F,NO.1221,Chung Cheng Rd., Taoyuan, Taiwan, R.O.C.

Tel: 886-3-3577799 Fax: 886-3-3577700

EMAIL: sales@taiwanalpha.com.tw

URL: http//www.taiwanalpha.com

THIRD ANGLE PROJECTION

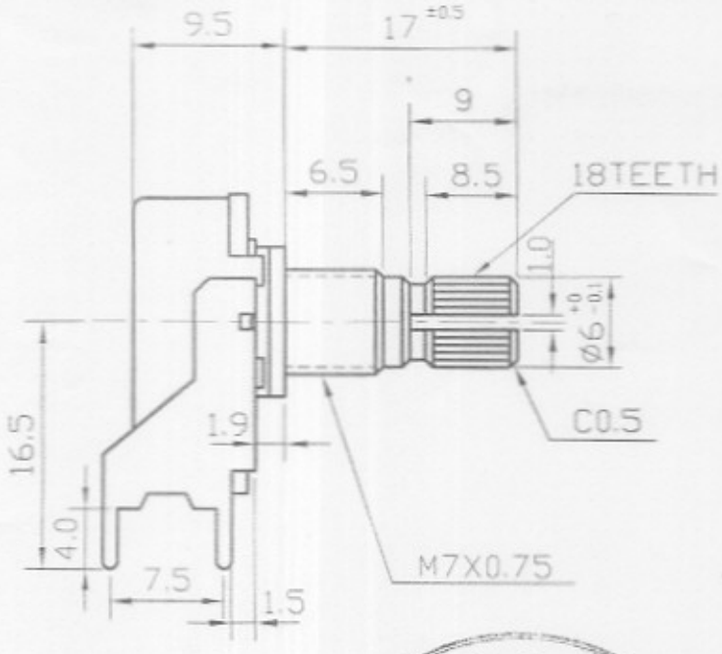

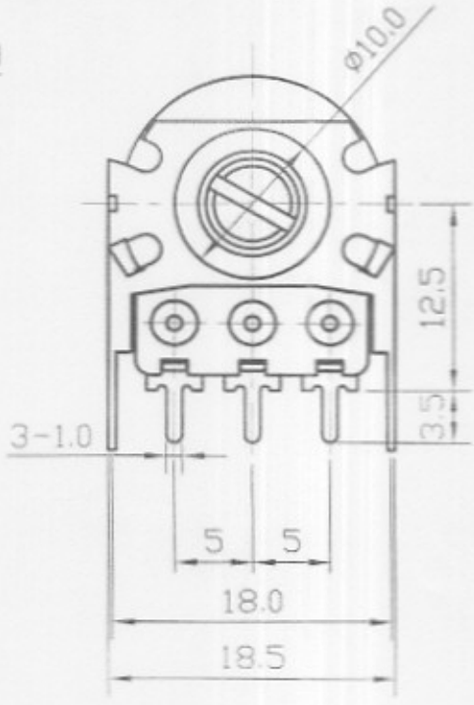

出圖印
95.12.27
R&D

NUT 1 PC

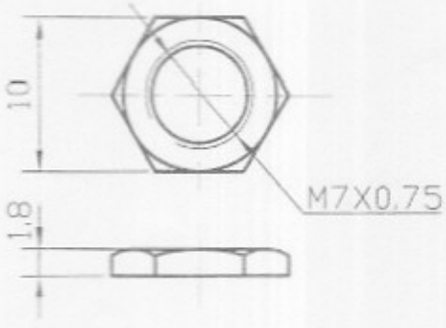

MOUNTING HOLE DETAIL
(VIEWPOINT OF SHAFT)

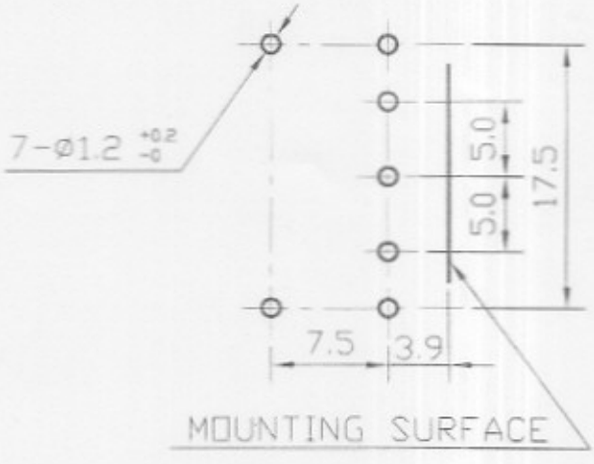

WASHER 1 PC t=0.4

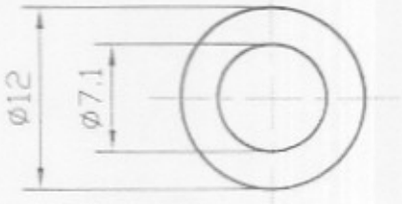

				RV16AEF-20B2-17K-XXX-1X41A
No.	DATE	DESCRIPTION	PART No.	NAME

TOL.UNILESS OTHERWISE STATED	DIMENSION	SCALE	DRAWN BY	CHECKED BY	APPROVED BY	DRAWING No.
less than 10 ±0.3 above 10~30 ±0.5	mm	2	傅 95.12.12 仟維	何 95.12.12	楊 95.12.12	

16∅單軸單連迴轉式 VR 規格書

SPECIFICATIONS OF 16∅ ROTARY POTENTIOMETER

一、 機械規格 MECHANICAL CHARACTERISITICS：

1.1 全迴轉角度：300 ± 5 度
OVERALL ROTATION ANGLE：300 ± 5°

1.2 迴轉轉矩：20～200gf-cm (迴轉速度 60 度 / 1 秒)
OPERATION TORQUE：20～200gf-cm .（ROTATIONAL SPEED 60° / 1 sec）

1.3 起動迴轉轉矩：450gf- cm 以下
STARTING TORQUE：450gf-cm MAX .

1.4 軸鬆動：固定腳焊錫後軸前端加上 500gf-cm 之力矩，於軸前端移動之 0.7 × L / 30 mm P-P 以內 .
PLAY OF SHAFT：THE RESISTOR SHALL BE MOUNTED BY SOLDERING THE MOUNTING LEGS ON THE PANEL, AND AN END THRUST OF 500gf-cm AT THE END OF THE SHAFT SHALL BE APPLIED .
THEN THE TOTAL PLAY OF THE SHAFT SHALL BE NOT EXCEED 0.7 × L / 30 mm P-P .

1.5 軸擠壓引張強度：焊錫後擠壓，引張耐 8kg，3 秒（指施加於垂直軸之端面而言）不可有電氣或機械上的異常 .
STRENGTH OF SHAFT AGAINST END THRUST：
THE SHAFT SHALL WITHSTAND AGAINST END THRUST OF NOT LESS THAN 3kgf FOR 3 SECONDS .

1.6 軸之迴轉止動強度：6kgf-cm 以上 .
SHAFT END STOP STRENGTH：6kgf-cm MIN .

1.7 軸橫擠壓強度：銲錫後軸前端垂直方向耐 3kgf-cm，3 秒後不可有電氣或機械上的異常 .（1.6，1.7 項並不包含銲錫部位之浮起）
ROBUSTNESS OF SHAFT AGAINST SIDE THRUST：
THE SHAFT SHALL WITHSTAND AGAINST SIDE THRUST OF NOT LESS THAN 3kgf-cm FOR 3 SECONDS ON THE END OF THE SHAFT AT RIGHT ANGLES TO THE AXIS OF THE SHAFT AFTER MOUNTING THE RESISTOR BY SOLDERING .

1.8 銲錫耐熱性：銲錫後（350 ±5°C，3 秒以內）不可發生顯著之鬆動接觸不良
RESISTANCE TO SOLDERING HEAT：
AFTER SOLDERING（350 ±5°C AND QUICKER THAN 3 SECONDS）THERE SHALL BE NO EVIDENCE OF POOR CONTACT BETWEEN RESISTANCE ELLEMENT AND TERMINALS，OR ANY PHYSICAL DAMAGES AS A RESULT OF THE TEST .

1.9 軸承螺絲固定強度：7kgf-cm 以上．
BUSHING MOUNT STRENGTH：7kgf-cm MIN．

二、 電氣規格 ELECTRICAL CHARACTERISITICS：

2.1 全阻值：阻值適用範圍 1KΩ～500KΩ（容許差 ±20%）
OVERALL RESISTANCE RANGE：1KΩ～500KΩ（TOLERANCE± 20%）

2.2 額定功率：B 線性 0.125W． B 以外線性 0.06W
POWER RATING：B TAPER 0.125W． EXCEPT B 0.06W

2.3 殘留阻值：1~2 端子／2~3 端子同．
RESIDUAL RESISTANCE：terminal 1~2／2~3

公稱阻抗值（KΩ） OVERALL RESISTANCE （KΩ）	殘留阻值（Ω） MAXIMUM ATTENUATION LEVEL（Ω）
R ≦ 20	10 以下 10MAX
20 ＜ R ≦ 100	20 以下 20MAX
100 ＜ R ≦ 1M	50 以下 50MAX

2.4 阻抗變化特性 TAPER：

阻抗變化特性 Taper	測定角度 Test point	端子 1-2 間輸出電壓 V1-2 / 端子 1-3 間輸出電壓 V1-3 (%)	端子 2-3 間輸出電壓 V2-3 / 端子 1-3 間輸出電壓 V1-3 (%)
A	150°	10-25	
B	150°	40-60	
* C	*150°		10-25
D(10A)	150°	6-15	
* E(25C)	*150°		15-35
K(25A)	150°	15-35	
W(4B)	90±5°	5-15	
	150°	40-60	
	210±5°	85-95	
M	75±5°	40-60	
	150°	98-100	
* N	*75±5°		40-60
	*150°		98-100
* X(10C)	*150°		6-15

（註）＊記號表示自第三端子測起 ＊WITH RESPECT TO TERMINAL 3

2.5 轉動雜音：依 JIS 測定法 47mV 以下（W：200mv 以下）.
ROTATION NOISE（REFER TO JIS）：47mV MAX .（W：200mV MAX）.

2.6 絕緣阻抗：D.C 500V 須在 100MΩ 以上
INSULATION RESISTANCE：100MΩ MIN . AT D.C 500 VOLTS

2.7 耐電壓：A.C 500V 可耐 1 分鐘以上
DIELECTRIC TEST：UNITS SHALL BE DESIGNED TO WITHSTAND 500 VOLTS BETWEEN RESISTANCE ELEMENTS AND CASE FOR A PERIOD OF ONE MINUTE WITHOUT DAMAGE OR ARCING .

2.8 最高使用電壓：A.C 150V .
MAXIMUM OPERATING VOLTAGE：150V A.C

三、 耐久性能 ENDURANCE CHARACTERISTICS：

3.1 電阻體迴轉壽命特性：15,000 迴轉以上
ROTATIONAL LIFE：MORE THAN 15,000 CYCLES

四、 其他之性能 依照 JISC 6443 普通級碳素系可變電阻器：
NOTE MEET OR EXCEED JISC 6443 REQUIREMENTS .

STANDARD RESISTANCE TAPER

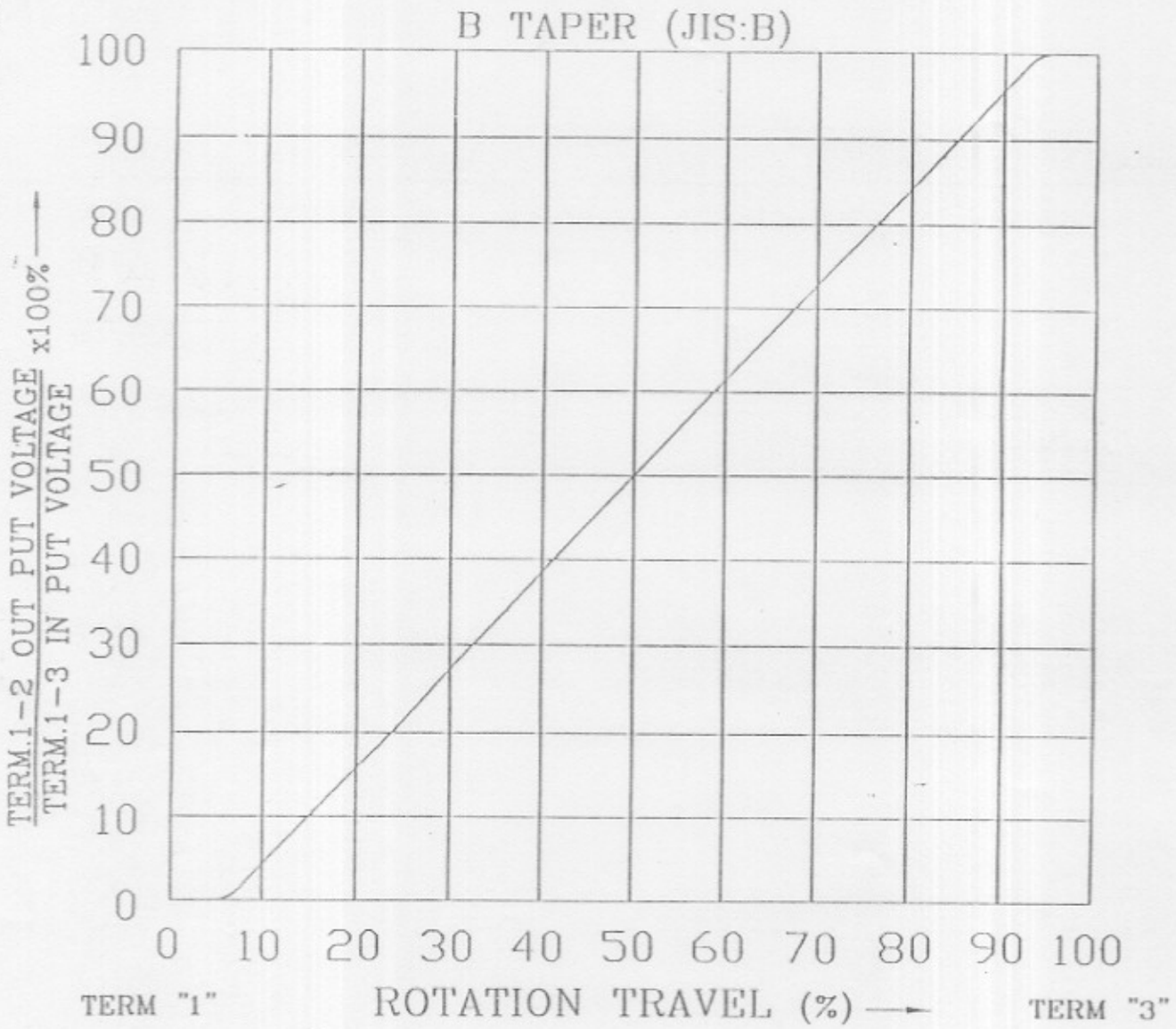

NO.	DATE	DESCRIPTION	MODEL NAME

TOL. UNLESS OTHERWISE STATED	DIMENSION	SCALE	DRAWN BY	CHECKED BY	APPROVED BY	DRAWING NO.
less than 10 ±0.3 above 10 ~ 30 ±0.5 above 30 ~100 ±1.0 above ±5°	mm		何 90.8.21 建志	王 90.8.21 茂松	王 90.8.21 茂松	

TAIWAN ALPHA ELECTRONIC CO., LTD.

Common Specification of Soldering (RoHS-Compliant)
焊接共通規格書(波峯焊)

1 Soldering conditions
無鉛銲接條件

Soldering shall be carried out under the following condition:
進行銲接處理時，請確保在下列工作條件:

1-1 Substrate to be soldered: Copper clad laminated phenol board of 1.6mm thick.
焊接物面料：t 1.6 mm 銅箔積層板。

1-2 Specific gravity of flux : 0.82 (applied by foam fluxer).
助銲劑比重：0.82(泡沫型塗佈)。

1-3 Foam head :The foam head should be limited to the height which is half of the board to be soldered .No flux should be allowed to run up onto the board's surface.
泡沫高度：發泡頂端大致在基板厚度一半的位置,而助焊劑不可流入基板表面上。

1-4 Regarding preheating , soldering surface temperature(undersurface of PCB) shall be settled within 100℃ in 2 mins.
預熱時間不超過兩分鐘，焊錫接面(即印刷電路板底)最高預道溫度不超過 100℃。

1-5 Conventional Soldering: To be performed within 4 seconds at 260℃ or below.
一般銲接：260℃以下，4 秒以內。
(This item is not recommended for and applicable in reflow soldering)
(本項焊錫溫度條件不適用於回流焊接作業設備)

1-6 Manual soldering : To be performed within 3 seconds at 350±5°C
手銲：350±5°C，3 秒以內。

Either items 1-5 or 1-6 should not be carried out more than 1 times.
項目 1-5 一般焊接或 1-6 手焊接不能超過一回。

The conditions stipulated above are only applicable to conventional soldering but not reflow soldering. If your soldering implementation suggests otherwise , please provide your specific soldering requirement.
以上爲一般焊接作業條件(不包括回流焊),使用高溫焊接作業設備請另外提出需求。